THE INDIANAPOLIS PUBLIC LIBRARY

EXTERIOR SIGNAGE REPLACEMENT

BIDDING DOCUMENTS

ADDENDUM 1

Addendum Issue Date: December 21, 2012

Issue Date: December 6, 2012

Contact: Mike Coghlan
Facilities Manager
The Indianapolis Public Library
2450 North Meridian Street
Indianapolis-Indiana 46206-0211

Telephone: (317) 275-4830

E-mail: mcoghlan@indypl.org

Web Site: http://www.indypl.org

ANSWERS TO QUESTIONS SUBMITTED BY BIDDERS

1. The College Avenue Branch has two Non-Typical sign drawings, but only one is called out in the Supporting Information, should we still provide a quote for the other?
   Answer: Yes. Refer to the attached Pre-bid Meeting Notes for additional information.

2. Is there an approximant location for the Nora Branch monument sign?
   Answer: The sign will be at the northeast corner of Guildford and 86th Street, approximately 100'-0" from the building.

3. In "Attachment F" for the Spades Park, East Washington Street, and East 38th Street Branches there are 2 drawings for each sign. There are two of the same monument signs shown with different colors. Are there to be second monument signs for these locations?
   Answer: No. There is only 1 monument sign for each location. The color options are shown for Library discussion purposes.

4. How are the monument sign faces to be manufactured?
   Answer: The faces are to be aluminum with white acrylic push through letters. Refer to page 22 of the Bidding Documents.

ATTACHMENT

1. Meeting Notes from the Pre-bid Conference held on December 18, 2012 in .pdf format.

2. Design Intent Drawings B1, B2, and B3 dated July 25, 2005, prepared by RLR Associates of the existing Central Library Pylon Sign.

End of Addendum 1

Meeting Notes

Date: December 18, 2012
Time: 11:00 am
Attendees: Thomas Swift, Big Apple Visual Group
Sharon Brooks, Bunting Graphics
O'Brien Bassett, Essential Architectural Signs
Jeff Hammersley, JBM Contractors
Nelson Pixler, Harmon Sign
Chuck Van Hyning, Ulett and Associates / 290 Signs
Alex Clotfelter, Taylor Brothers Construction
Miguel Ruiz, Contract Administrator
Prepared By: Michael Coghlan, Facilities Manager
Location: Library Services Center, Board Kitchen
Regarding: Exterior Signage Replacement
Pre-bid Conference

---

1. Welcome, Introductions and Services Overview:
   - .1 Attendees were welcomed to the Library and thanked for their interest in the Project.
   - .2 The Library is seeking a partner/Contractor to provide signage services for the Library facilities.
   - .3 Contractors are advised the responses to the bid are considered Public Records. Refer to paragraph on page 6 for procedures concerning confidential information.
   - .4 Written questions and clarification of the scope of Services will be answered by the Library. Refer to Section II. page 7.

2. Project Overview:
   - .1 The overall intent of the project is to replace the exterior signage at all of our facilities to reflect a consistent image of our new service mark. All work for the project will be the responsibility of the successful Contractor.
   - .2 The scope of work is described in Attachments E and F of the Bidding Documents.
   - .3 The shop drawing required in the response is to help in the evaluation of the bids.
   - .4 A 3 year warranty is required per page 21, Attachment E.
   - .5 Refer to the Iran investments requirements on page 6.
   - .6 E-Verify affidavit is required at signing of agreement.
   - .7 Library sites are available for Contractor tours.
   - .8 Examinations of the existing conditions is required of all Contractors.
   - .9 The form of agreement will be AIA 105, with owner provided changes.

3. The Bid Evaluation process is described on page 14.

4. Bid Format:
   .1 Contractor's Bid and Non-collusion Affidavit – State Form 96.
   .2 Contractor information on subcontractors.
   .3 Shop Drawing.

5. The Bid Submittal Deadline and Public Opening is scheduled for **January 8, 201, 1:00 PM EST** at the Library Services Center. The Library will open each received bid and read aloud information from the Bid Form.

6. Questions from the Attendees:
   .1 In Attachment F, there are 2 images for the East 38th Street, East Washington Street, and Spades Park Branches. Are 2 signs required at these locations?
   Answer: No. One sign is required.

   .2 Will the Contractor be responsible for getting IHPC approvals for the signs at Central, Irvington, Fountain Square, and LSC?
   Answer: No. The Library will submit the drawings prepared by the Contractor for approval by the IHPC. Refer to page 20 of the Bidding Documents.

   .3 For signs without existing power or concrete bases, will the Contractor be responsible for these components?
   Answer: Yes. The Contractor will be responsible for all work required for the removal of the existing sign and the installation of the new sign. Work may include demolition, electrical work by a licensed electrician, concrete, signage, and landscape repair at each location. Refer to page 2 of the Bidding Documents.

   .4 For internally illuminated signs, will the color blocks or the color website text be illuminated?
   Answer: No. Only the white text of the Library name and the white text in the color block is to be illuminated as push-through text.

   .5 Does the Library have any participation requirements as part of the Bid?
   Answer: No. Refer to page 5 of the Bidding Documents.

.6 For the Library Services Center signs on Page 25 of Attachment F, are they internally illuminated?
Answer: Yes. They are internally 5" deep LED internally illuminated metal channel letters.

.7 Will the Contractor be responsible for getting landlord approvals for the signs at Brightwood, Flanner House, Fountain Square, and Glendale?
Answer: No. The Library will submit the drawings prepared by the Contractor for approval by the landlords. Refer to page 25 of the Bidding Documents.

.8 Is the College façade sign above the entrance internally illuminated?
Answer: No. The logo and cut letters are to be 2" deep.

.9 Are the Glendale and Brightwood pylon signs 2-sided, internally illuminated signs?
Answer: Yes. Refer to page 25 of the Bidding Documents.

.10 Are the Glendale building façade signs internally illuminated?
Answer: Yes. The logo and letters are LED internally illuminated. The text is 5" deep metal channel letters with white plexiglass.

.11 Are the Brightwood building façade signs internally illuminated?
Answer: Yes. The logo and letters are LED internally illuminated. The text is 5" deep metal channel letters with blue plexiglass.

.12 What is the budget for the Project?
Answer: The Library has budgeted $175,000 to $225,000.

.13 Is the Project State Sales tax exempt?
Answer: Yes.

.14 Will the contractor be responsible for paying for the permits?
Answer: No. The Library will pay for any required permits. Refer to page 20 of the Bidding Documents.

.15 Will the contractor be responsible for locating all underground utilities required for the work?
Answer: Yes. Refer to page 23 of the Bidding Documents.

.16 Please clarify the addresses for the Nora, Flanner House, and Lawrence Branches?
Answer: Flanner House - 2424 Dr. Martin Luther King, Jr. Street
Lawrence - 7898 Hague Road
Nora - 8625 Guilford Avenue

.17 What is the thickness of the sign required for the Central Library Monument Signs on St. Clair Street?
Answer: The sign is to be 1" thick of solid surface with vinyl overlay.

.18 What are the requirements for the Central Garage Pylon?
Answer: The face of the existing internally illuminated plyon sign with the text is to be replaced with a new aluminum panel with push through white text. For a description of the existing pylon sign construction, refer to the attached design intent drawings dated July 25, 2005, prepared by RLR Associates.

End of Meeting Notes.

Attachment:
Design Intent Drawings B1, B2, and B3 dated July 25, 2005, prepared by RLR Associates of the existing Central Library Pylon Sign.

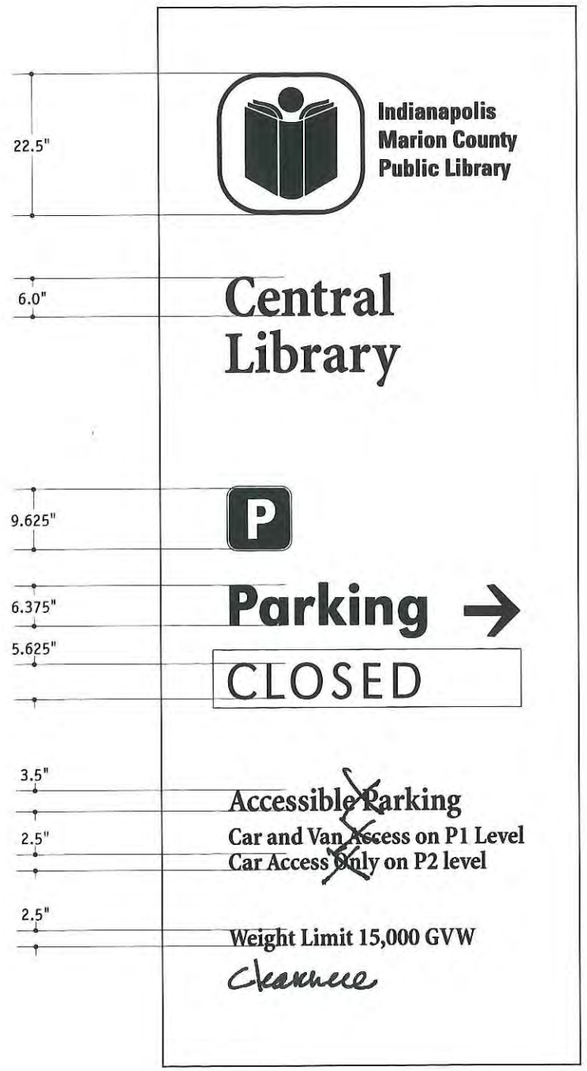

Elevation - Graphic and Text Sizes A

Scale: 1/2"= 1'-0"

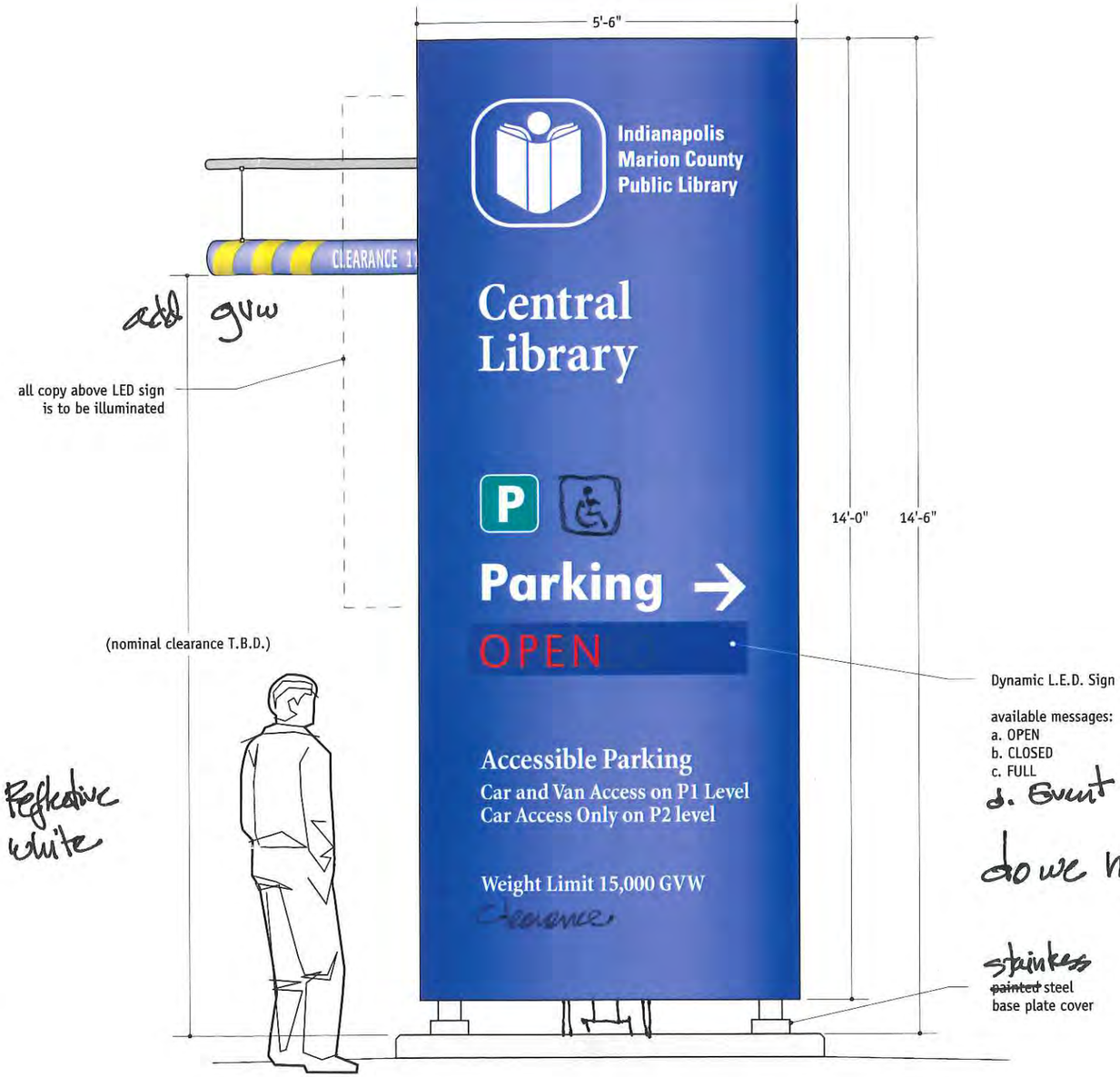

Elevation - Sign Face A

Scale: 1/2"= 1'-0"

RECEIVED
JUL 25 2005
IMCPL

RLR ASSOCIATES INC

Design for Distinguishing Environments

www.rlr.biz

RLR ASSOCIATES INC
1302 North Illinois Street
Indianapolis IN 46202 USA
tel 317 632 1300 fax 317 632 1302

General note:
These Drawings express design intent. Contractor shall provide all fabrication, specification, and installation details for review and approval.

Client
Woollen, Molzan and Partners

Owner
Indpls. Marion County Public Library

Project Number
WMP-001 AS#1

Project Name
Central Library

Date
25 July, 2005

Phase
Design Intent Drawings

Sheet Title
SIGN ELEVATION

Sheet Number
B1

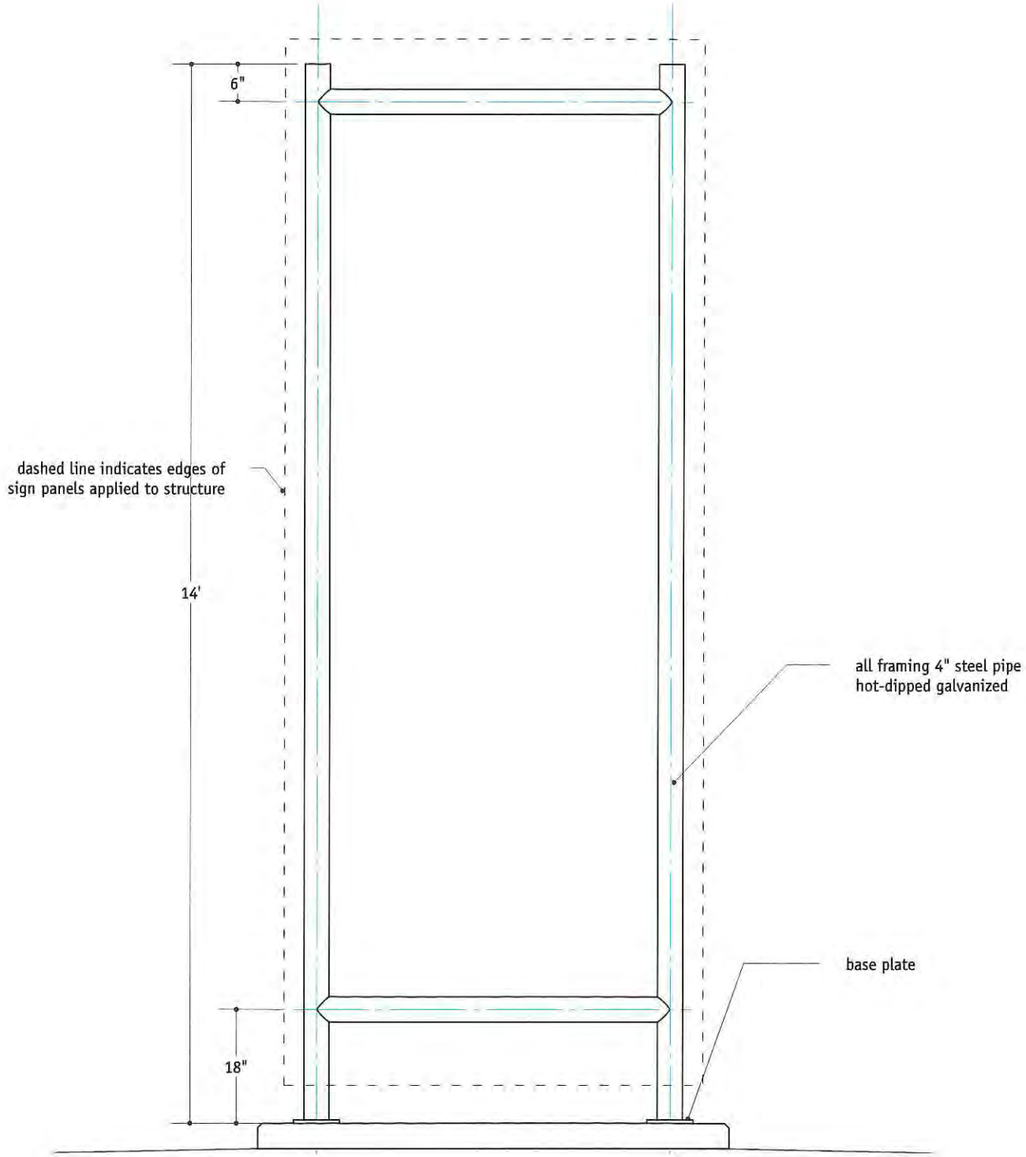

Framework Elevation - Side A

Scale: 1/2"= 1'-0"

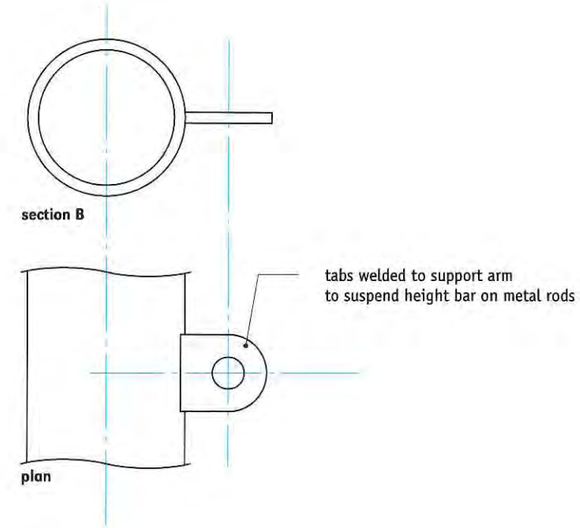

Detail - Support Bracket for Height Bar

Not to Scale

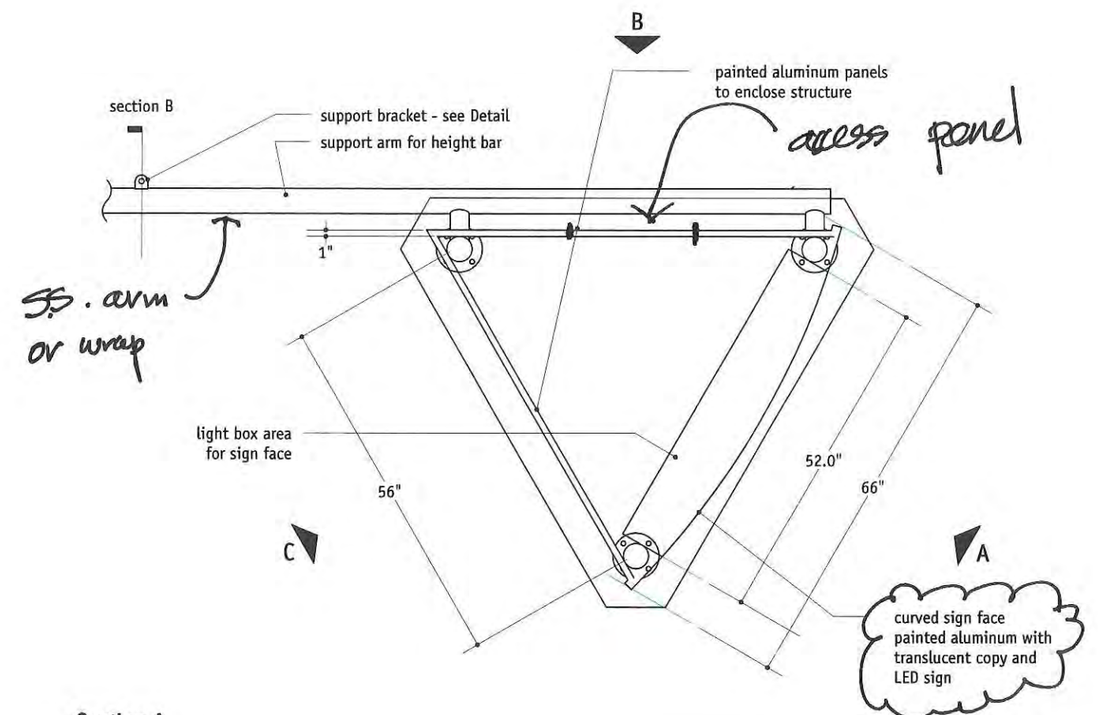

Section A

Scale: 1/2"= 1'-0"

RLR ASSOCIATES INC
1302 North Illinois Street
Indianapolis IN 46202 USA
tel 317 632 1300 fax 317 632 1302

General note:
These Drawings express design intent. Contractor shall provide all fabrication, specification, and installation details for review and approval.

Client
Woollen, Molzan and Partners
Owner
Indpls. Marion County Public Library

Project Number
WMP-001 AS#1
Project Name
Central Library

Date
25 July, 2005
Phase
Design Intent Drawings

Sheet Title
SIGN FRAMEWORK

Sheet Number
B2

RLR ASSOCIATES INC
Design for Distinguishing Environments
www.rlr.biz

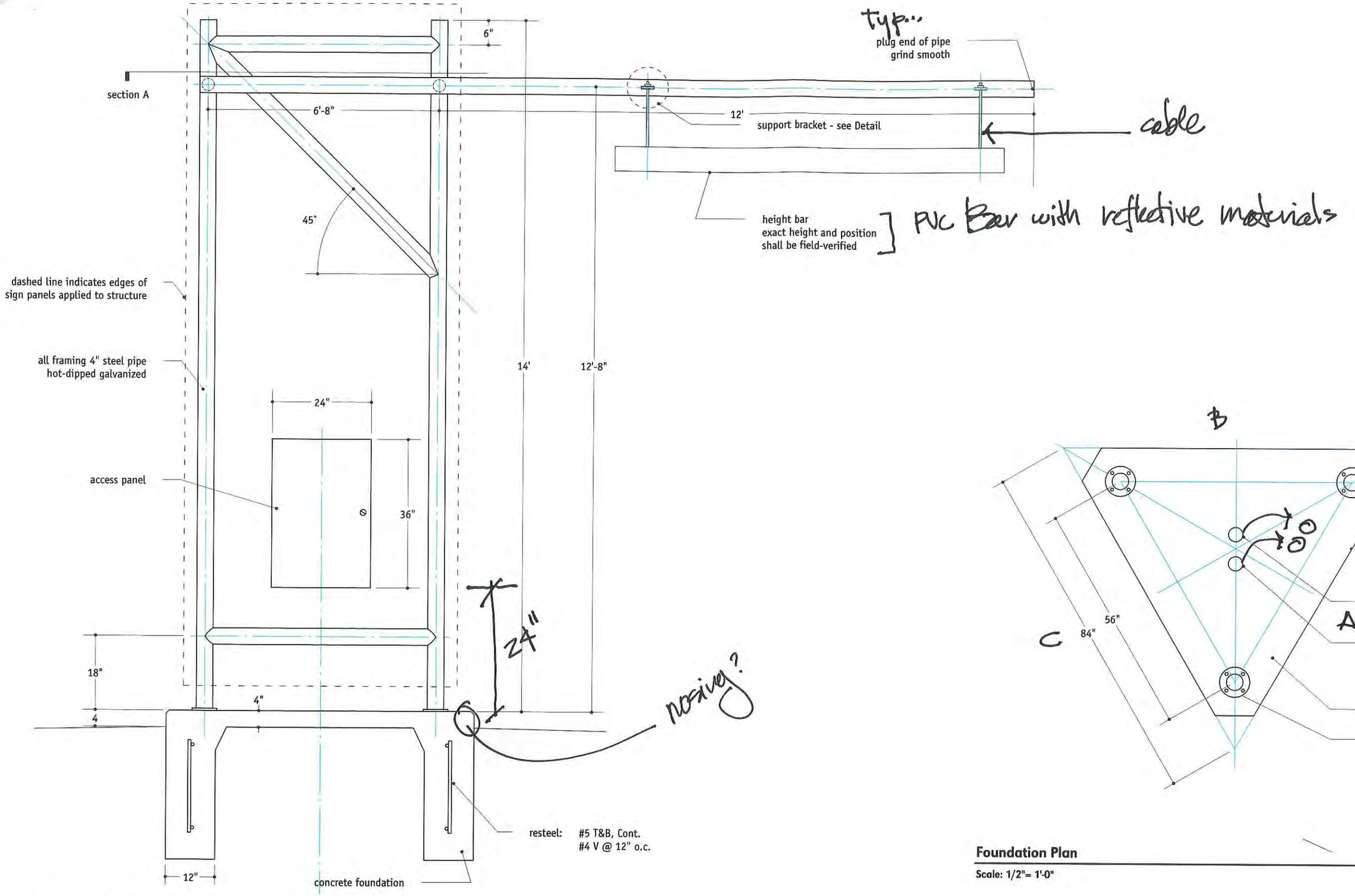

Elevation - Side B

Scale: 1/2"= 1'-0"

Foundation Plan

Scale: 1/2"= 1'-0"

RLR ASSOCIATES INC
1302 North Illinois Street
Indianapolis IN 46202 USA
tel 317 632 1300 fax 317 632 1302

General note:
These Drawings express design intent. Contractor shall provide all fabrication, specification, and installation details for review and approval.

Client
Woollen, Molzan and Partners

Owner
Indpls. Marion County Public Library

Project Number
WMP-001 AS#1

Project Name
Central Library

Date
25 July, 2005

Phase
Design Intent Drawings

Sheet Title
SIGN FOUNDATION & FRAMEWORK

Sheet Number
B3

RLR ASSOCIATES INC
Design for Distinguishing Environments
www.rlr.biz